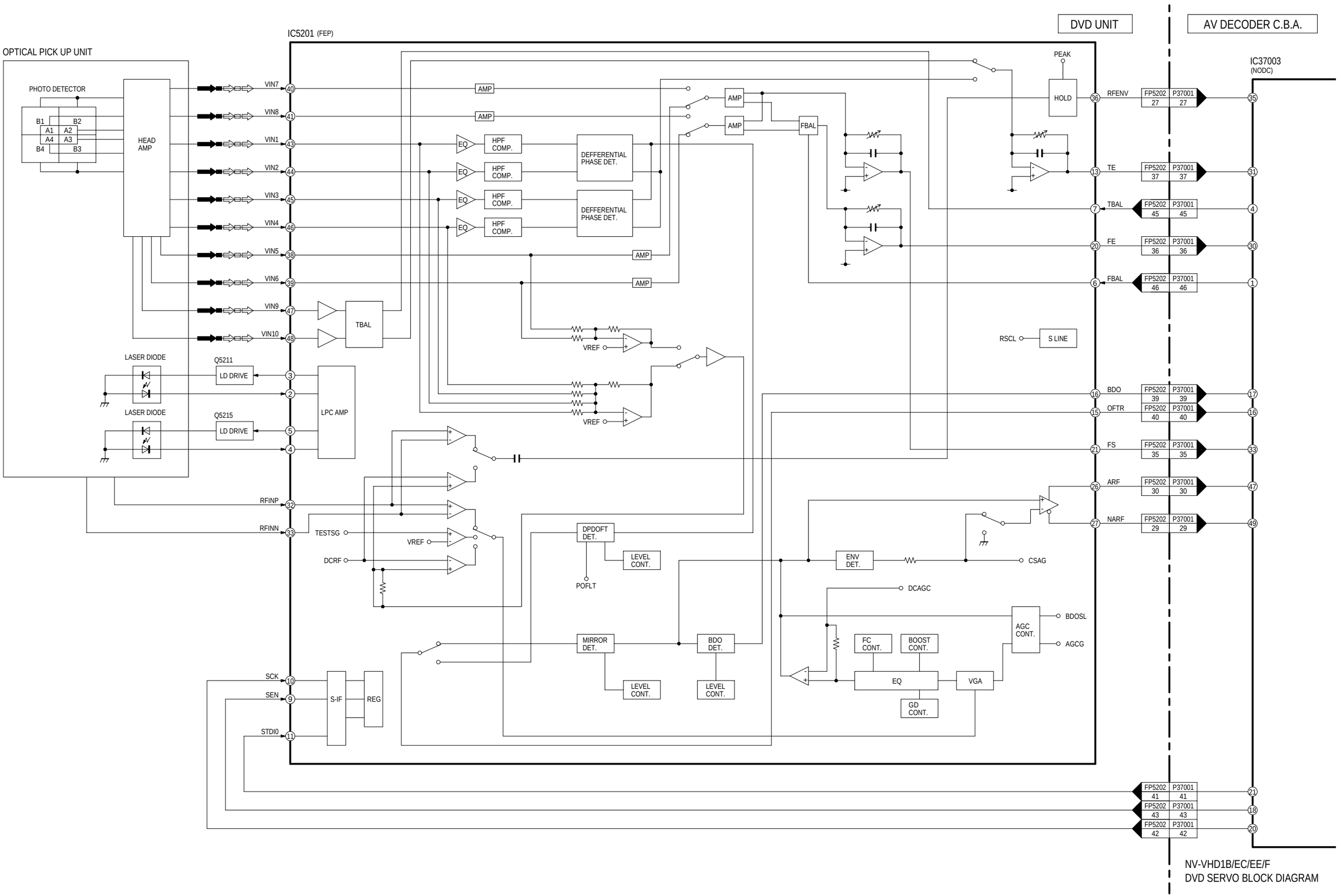

NV-VHD1B/EC/EE/F
DVD SERVO BLOCK DIAGRAM