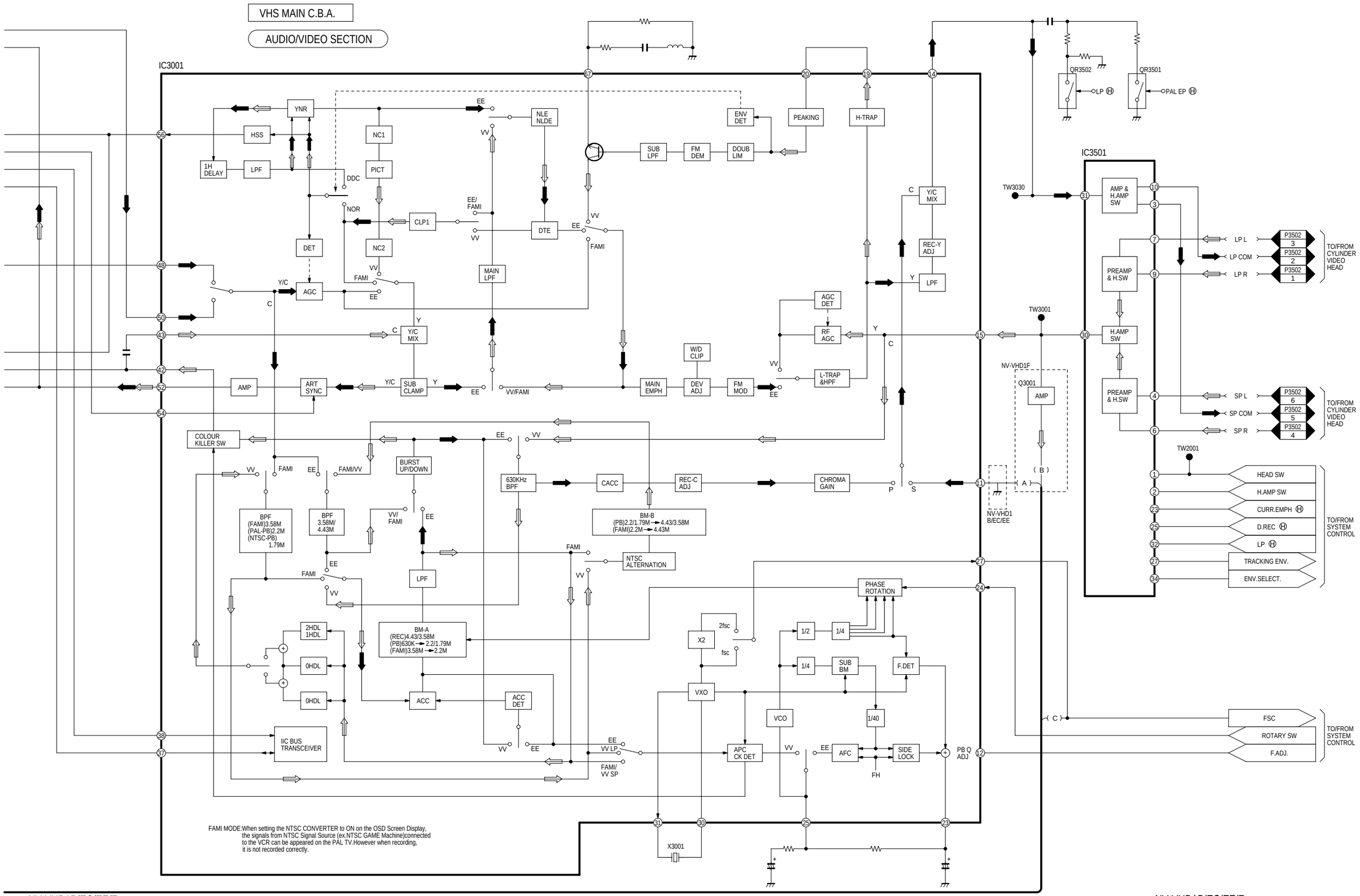

NV-VHD1B/EC/EE/F
VCR LUMINANCE & CHROMINANCE BLOCK DIAGRAM

NV-VHD1B/EC/EE/F
VCR LUMINANCE & CHROMINANCE BLOCK DIAGRAM